Information=: www.travelvisionmodi.nl

INSTALLATION & USER MANUAL

Version (GB) 1.2a March 2002

Introduction

Armada Meulenbroek is not responsible for any error or misprint in this Installation and User Manual and we reserve the right to make any adjustment to the contents of this Installation and User Manual and/or the Products, as herein described, without having to give any prior notice. Armada Meulenbroek does not accept any liability for any damages howsoever caused, except in the event when the damage is the result of gross neglect or misconduct by Armada Meulenbroek.

WARNING: PLEASE READ CAREFULLY

Travel VisionMoDi ® is a registered trademark of ParkKing Europe bv, also trading as Armada Meulenbroek.
Before operating the Travel VisionMoDi ® ensure you have read and understood the contents of this Installation and User Manual.
Follow the instructions and pay special attention to all recommendations, notes and warnings.
Ensure all wiring, cables and connections are correct before you start operating the Travel VisionMoDi ®.
Before servicing the Travel VisionMoDi ® switch it off and disconnect it from the power supply.
Beware if you remove the dome the dish might erect and position itself without prior warning, when the system remains connected to the power supply.
There are no parts in the system which require service or maintenance by the user. Only a qualified engineer of an approved installer by Armada Meulenbroek should service and perform maintenance on the system.

It is not recommended to clean the dome with high-pressure equipment. Instead it is recommended to use a soft damp cloth with natural soap.

Please ask the dealer/installer for instructions in the event the dome requires tilting.

© Copyright 2001 Armada Meulenbroek

Contents

1.1 General information Travel VisionMoDi ® 4
1.2 Parts checklist 4
2. Installation instructions 4
2.1 Installation instructions dome 4
2.2 Installation of the electronics 6
2.3 Installation of the MCM unit 8
3.1 MCM unit functionality 8
3.2 Error Codes MCM unit 9
3.3 Possible solutions to Error Codes 9
3.4 Display Status MCM unit 10
3.5 Button combinations MCM unit 10
4. Switching on the system 11
5. Technical data 12
6. Guarantee conditions 13

1.1 General information Travel VisionMoDi ®

The Travel VisionMoDi ® has been developed especially and exclusively for the professional (inland water) ships, such as f.i. Rhine barges and cruise liners.
The system enables comfortable viewing of TV programmes and easy listening to the Radio station transmitted via satellite, even when the ships sails.

Only the best possible quality materials such, as stainless steel and high-endurance synthetics, have been used.
The mechanism of the antenna is driven by two step motors and gear belts. This ensures maximum functionality with limited service requirements.

1.2 Parts checklist

The packaging of the system should contain at least the following parts:

- Antenna mechanism (dome)
- MCM unit
- Installation & User Manual
- Parts bag containing:
  - 2 pcs. 5-pin plug
  - 1 pc. 2-pin plug
  - 3 pcs. bolts M8 x 45 mm stainless steel
  - 3 pcs. lock washers M8 stainless steel

Note: The parts bag is in the same box as the MCM unit.

2. Installation instructions

2.1 Installation instructions dome

De Travel VisionMoDi ® is packed in a strong plastic bag. It requires 2 persons to lift the system from the box.

The antenna requires installation on a flat and stable surface.
If the Travel VisionMoDi ® is installed on a metal surface, which is accessible underneath, then the antenna mechanism can be fitted and secured with the M8 bolts and lock washers.
If the mechanism requires fitting from inside the dome, it is recommended to drill the M8 holes in the synthetic feet to a diameter of 9mm and secure it with long enough M8 stainless steel bolts. This manner of installation requires special attention so that the separation of the galvanic surfaces by means of the grey synthetic feet remains intact.

For installation of the system the upper part of the dome has to be removed temporarily. To do this you have to roll up the rubber sealant just so far that you can unscrew the six screws, using the right screwdriver. Once unscrewed you can remove the top half of the dome.

Note: Removing the dome should never take place in wet/damp conditions!

ATTENTION: Always check that there no obstacles causing reception interference! So the antenna must be 360 degrees free from obstacles.

Rule of thumb: **If an obstacle is 1 meter higher than the dome than it must be at least 3 meters away from it.**

This rule of thumb assumes a minimum elevation of 20 degrees. See the following table:

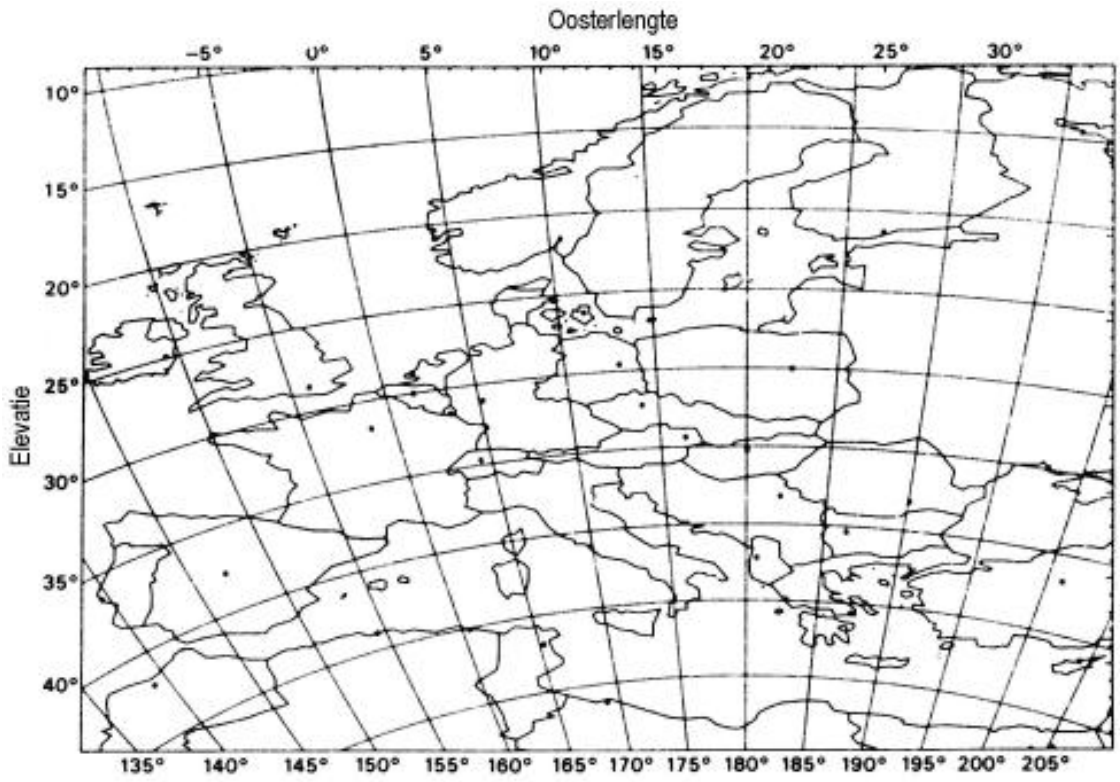

Table 1, Elevation of the dish versus geographic position.

2.2 Installation of the electronics

The Travel VisionMoDi ® may be connected to continuous power of 24 Volts to 36 Volts. De current drain at 24 Volts is approx. 2 Amps.
Switching the system on means a (short period) higher current drain, which depends on the type of cable and connection used. It is generally recommended to use 220..240 Volts~ to 24 Volts DC power. This should guarantee the right galvanic separation of the current on board.
You should connect the 'positive' of the current to the connection which shows 12…24Vdc (24..36Vdc) and the 'negative' of the current on the connection which shows 0V.
The 5-pin plug should be used for the voluntary connection of the MCM unit.
Disadvantages not connecting the MCM unit are:

- No Monitoring
- No Stand By function. The Stand By function enables the dish to remain locked on the satellite.
- No selection of a different satellites.

Remark: The system can be switched 'on' and 'off' by a switch (dis)connecting the current. If the system is switched 'off' in this manner, it means it will not remain locked on the satellite.

The MCM cable requires connection as follows:
NOTE! 'TxD' connects to 'RxD', 'RxD' connects to 'TxD'.

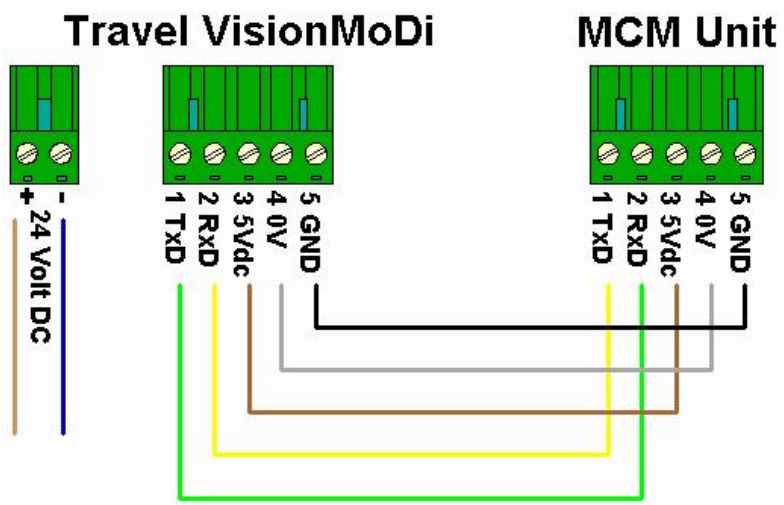

figure 1, Connection of the MCM unit to Travel VisionMoDi ®

If only one satellite receiver is connected to the Travel VisionMoDi ® , than the coax cable should be connected to OUT 1.
Variations to connections are shown in figure 2.

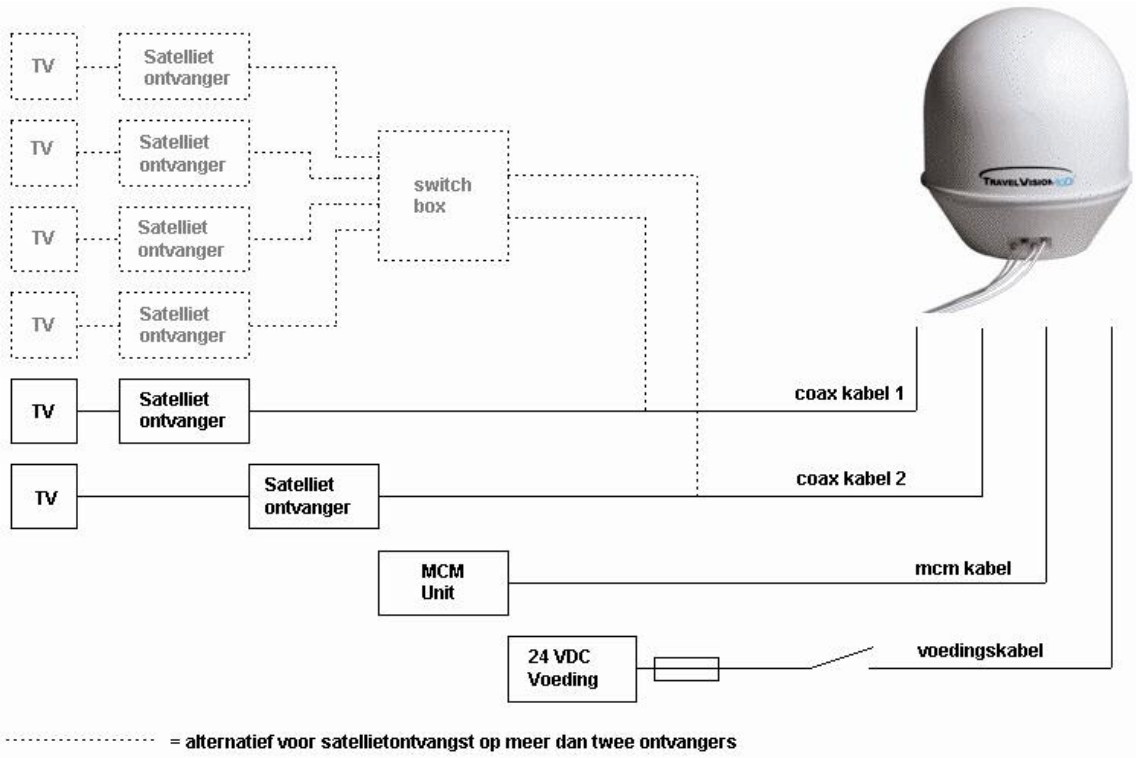

figure 2, connection possibilities.

When re-positioning the upper part of the dome to the bottom please ensure that the special marks on both halves match.
Then fit and tighten the six screws, using the right screwdriver.
Finally the rubber sealant should be rolled into place with the insertions facing downwards. If the insertions face upwards it means running the risk of damp/water getting into the system.

Any (pre-)drilled holes need to be sealed to prevent damp/water getting into the system!

2.3 Installation of the MCM unit

The MCM unit , see figure 3, can be “built in” or fitted to the enclosed clamp. To "built in” the MCM unit it can be fitted ‘shock proof’ as per the technical specifications part 5. If ‘shock proof’ installation is not possible, the four ‘fitting holes’ on the corners of the front panel should be used to secure the unit with screws.

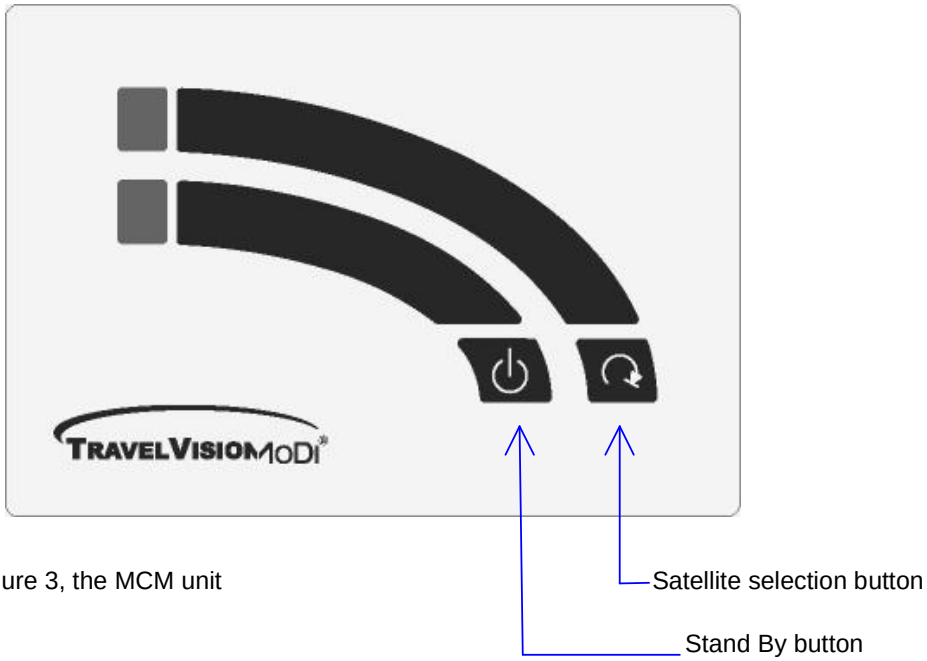

figure 3, the MCM unit

3.1 MCM unit functionality

The MCM unit has 3 functions:

1 **M**onitoring; The display shows the status of the dish antenna. The display of several codes is possible (for explanation see Error Codes and Status).

2 **C**ontrol: To send instructions to the dish antenna. F.i. Satellite selection, Stand By function, etc.

3 **M**aintenance: Replacing/up-dating software.

3.2 Error Codes MCM unit

Error Codes:

E1 : Satellite not found.
E2 : Reference positions not detected.
E3 : No LNB current.
H : No 22kHz signal (Wrong selection frequency band.)
E5 : No LNB signal
00 : No communication between MCM unit and dôme

3.3 Possible solutions to Error Codes

E1 Satellite not found. Possible cause: Obstruction of the system, f.i. when the boat is in a dock.
After 10 minutes the system will automatically search for the satellite. You can initiate the search cycles manually at any time by resetting the system. (First press the Stand By button and keep it pressed in. Then also press the Satellite Selection button and release both at the same time).

E2 Reference positions not detected. Reset the system.
If E2 keeps appearing in the display, it could be a default in the system. In this event contact your dealer/installer.

E3 No LNB current. The most likely cause is that the system is switched off. When you are sure the system is switched on then there is a default in the system. In this event contact your dealer /installer.

H No 22kHz LNB signal. Most likely your digital satellite receiver unit is switched to a frequency band witch cannot be detected. When you are sure your satellite receiver is connected correctly and switched on a correct frequency band, but still H appears in the display, then there is a default in the system. In this event contact your dealer/installer.

E5 No LNB signal. Most likely a default in the system. In this event contact your dealer /installer.

00 No communication between the MCM unit and dome. This can occur if the MCM unit is connected to the dome with its own live current. Switch the current off and on. If the ‘00’ error remains in the display, please check the wiring cables and connections. See figure 1. If no faults are detected, contact your dealer/installer.

3.4 Display Status MCM unit

The upper 7-segments displays the satellite that the system is tracking.
The bottom 7-segments displays the status of the system.
All the Error Codes and Status Displays are signals from the dome to the MCM unit.

Status :	L	: searching for reference sensors
	E	: setting of the elevation
	Continuous moving	: searching for satellite
	-	: locked on satellite; follow procedure becomes direct active when a change occurs which requires tracking.
	P	: increase signal strength
	t	: tracking
	:	: Stand By
	00	: no communication with the Travel VisionMoDi ®

Starting: continuous moving display, software version will be displayed.

Right button next satellite (display shows satellite number)
Present configuration:

Satellite No. 1). Astra 19.2° East
2). Eutelsat HotBird 13° East
3). Telecom 2C op 5° West, only horizontal

3.5 Button combinations MCM unit

- Left button: On/off switch for Stand By function.
- Right button: Satellite selection.
- Left button and then Right button resets the system.
- Left and after 5 seconds Right button: EP signals in display. When signalling stops the system can be programmed.
  The means that 'up-graded' software can be installed from a (Laptop) PC that has the *Travel VisionMoDi ® programmer* software and a null-modem cable.

4. Switching on the system

Assuming that the installation of the system is correct, the Travel VisionMoDi ® has been designed in such a manner that switching the system on is simple

- Switch on your satellite receiver and TV.
- Switch on the current for the Travel VisionMoDi ®. This may vary, depending on the type of installation. Please ensure that your installer explains in detail and that you fully understand how the current of the Travel VisionMoDi ® is switched on and off.
- After some time the Travel VisionMoDi ® will be locked on and track (the latest selected) satellite and show the reception signal on your TV.
- When the MCM unit is connected and switched on, you can select another satellite or switch the system into Stand By mode.

Remark in respect of the MCM unit display:

As the actual functions of your commands take place in the dome, it might take a while before it becomes apparent in the display.

Recommendation:

It is recommend to keep the system switched on. This reduces temperature and climate variations in the dome, thus causing less likely harm to electronics and prolonging the life span of the system.

5. Technical data

Dish diameter:	60 cm.
Dome diameter:	68 cm.
Dome height:	79 cm.
Weight:	22 kg.
Gross shipment size and weight:	lxwxh=69x69x82 cm, approx. 30 kg.
Power:	24..36 V DC
Curent drain:	2,5 Amp. Max.
Cable:	
MCM cable:	4x0,32 mm2 protected
Power cable:	2x1mm2 (minimum)
Coax cable:	75 Ohm (H125)
Monitor Output Protocol:	RS232 19,2 kBd, N,8,1
Maintenance (Up Load):	RS232 9,6 kBd, N,8,1
MCM panel:	
“Built in” measurements:	136 x 85 mm (l x w)
“Built in” depth:	approx. 40 mm taking cables into consideration
Front panel:	150 x 105 mm (l x w)

6. Guarantee conditions

1. Armada Meulenbroek guarantees full functionality of the Travel VisionMoDi system as a result of its continuous quality control and the professionalism it requires from its network of appointed qualified installers.
2. If the Travel VisionMoDi system is used under normal circumstances, but within 24 months from the date of installation the system does not function as a result of a manufacturing or material fault, then this fault will repaired as per the guarantee conditions as herein defined.
3. This guarantee only applies if the VisionMoDi system is installed by an approved and by and Armada Meulenbroek appointed installer.
4. The guarantee should be registered on-line by the installer with Armada Meulenbroek directly, in any event within 1 month, after installation of the Travel VisionMoDi system. As proof of registration for the owner of the Travel VisionMoDi system the installer should complete and sign the last page of this Installation and User Manual.
5. The guarantee is not transferable.
6. The installer can contact the Armada Meulenbroek help-desk for free advice on installation, trouble shooting and repairs of the Travel VisionMoDi system.
7. The owner of the Travel VisionMoDi system should immediately contact the installer in the event of a defect of the system and provide access to the system at first opportunity to trace the defect.
8. If the installer can repair the system on the spot, he is entitled to do so. If this is not possible then the installer will dismantle the system, without any obligation to provide a replacement system, and have the system repaired upon consultation with the Armada Meulenbroek help-desk.
9. Armada Meulenbroek reserves the right to appoint and use third parties in the handling of its guarantee and/or service obligations.
10. The guarantee only applies when all obligations have been met by the installer and user of the Travel VisionMoDi system. The liability of Armada Meulenbroek is limited to the costs of repair or replacement the Travel VisionMoDi system, or the defected part of the system, plus if applicable any labour or transport costs, such always at the discretion of Armada Meulenbroek.
11. Armada Meulenbroek reserves the right to pass judgement at its discretion, as to whether the defect is caused by improper use or installation of the Travel VisionMoDi system, in which event the guarantee will be void and therefore any claim invalid.
12. Armada Meulenbroek is only responsible for and committed to the functionality purposes of the Travel VisionMoDi as defined in this Installation and User Manual. Armada Meulenbroek will not accept any liability or claims for damages as a result of improper use or other use than it is meant for of the system.
13. Armada Meulenbroek does not accept any liability or claim for damages for any (functionality) defect of the Travel VisionMoDi system, when this is caused by a calamity beyond our control.